ARG 5-20

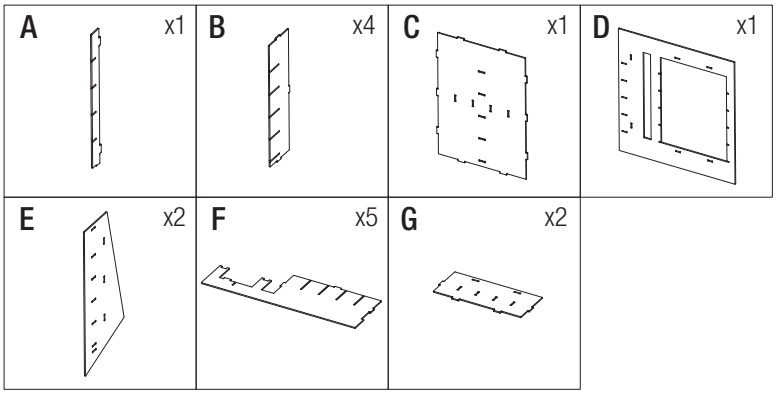

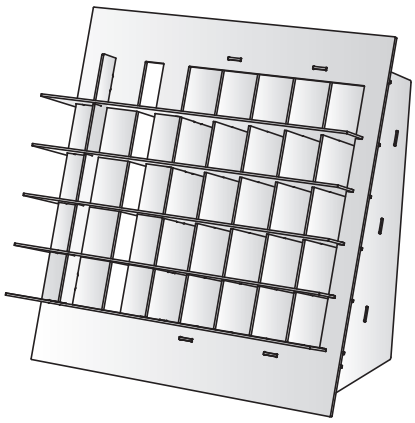

Step 1.

-combine parts **A** with **D**
-combine parts **F** with **A** and **D**

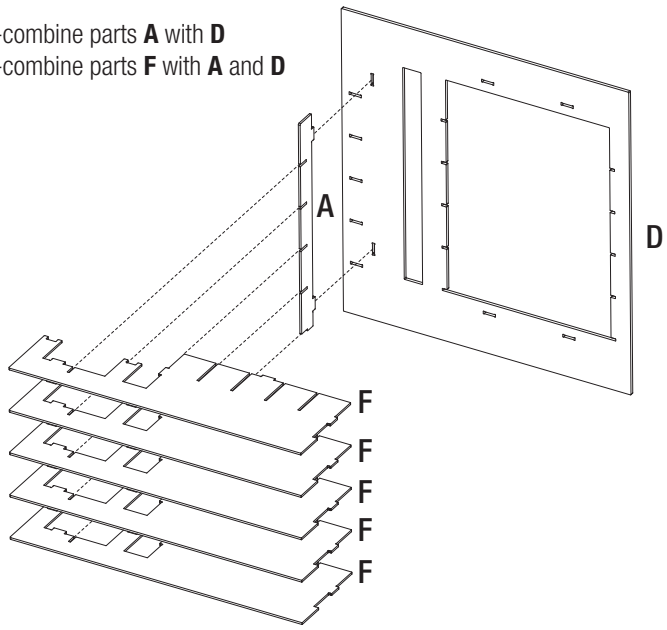

Step 2.

-combine parts **B** with **C**
-combine parts **G** with **B** and **C**

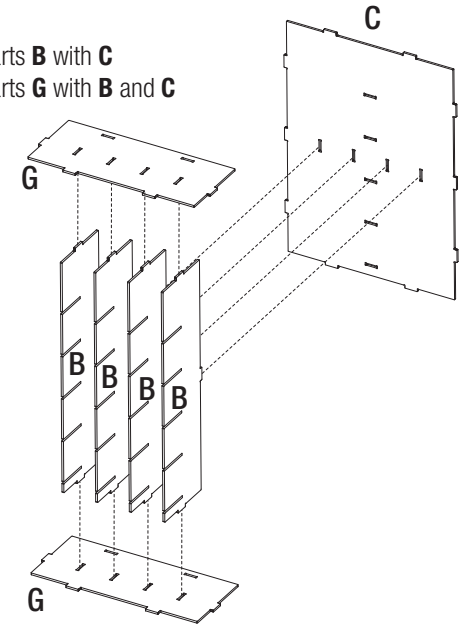

Step 3.

-combine two construced structures

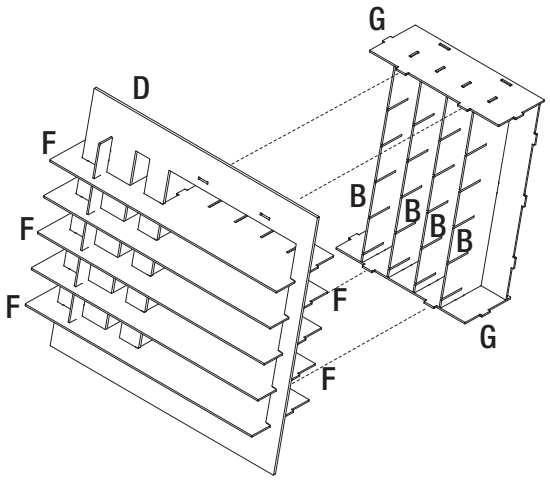

Step 4.

-add remaining sides (**E**)

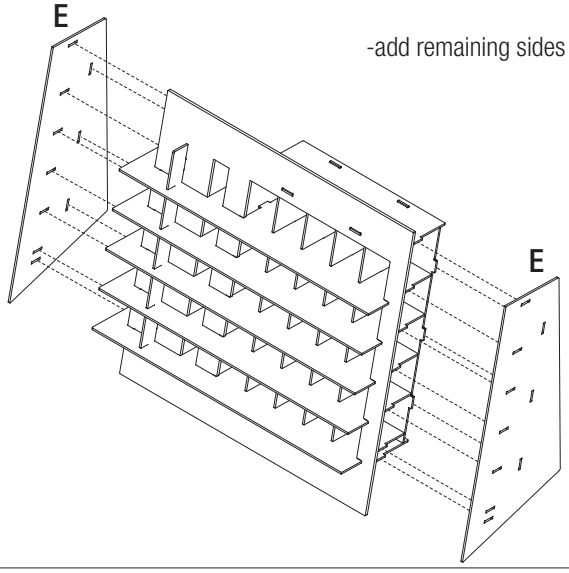

concept-s
Ladenbau & Objektdesign GmbH
Steinbeisstraße 8
DE-73614 Schorndorf
Tel (+49) 7181-9 93 71-0
Fax (+49) 7181-9 93 71-62
info@concept-s-design.com
www.concept-s-design.com